OPTIONAL PURE / SURFACES & PARTIAL DIFFERENTIATION

Partial Derivatives, Sections and Contours

Questions by topic 15 questions · 141 marks

EXAM BOARDS OCR A Y545 · OCR MEI Extra Pure Y435

Instructions

OCR MEI Extra Pure (Y435): second partial derivatives are not examined. Questions 3 and 13 to 15 can be left out, or just their part **(b)**.

Questions

Question 1	*8 marks*	2
Question 2	*8 marks*	3
Question 3	*8 marks*	4
Question 4	*9 marks*	5
Question 5	*6 marks*	6
Question 6	*10 marks*	7
Question 7	*10 marks*	8
Question 8	*10 marks*	9
Question 9	*9 marks*	10
Question 10	*10 marks*	11
Question 11	*15 marks*	12
Question 12	*7 marks*	13
Question 13	*10 marks*	14
Question 14	*10 marks*	15
Question 15	*11 marks*	16

1. The surface S is given by

$$z = xy^2 - 4y$$

for $1 \leq x \leq 4$ and $-3 \leq y \leq 3$.

(a) (i) Write down the equation of the section of S in the plane $x = 2$. **[1]**

(ii) Sketch this section, labelling the coordinates (y, z) of its vertex and of the points where it meets the y-axis. **[2]**

(b) Find the equation of the contour of S which passes through the point on S where $x = 2$ and $y = 1$, giving x in terms of y. **[2]**

(c) Find $\frac{\partial z}{\partial x}$ and $\frac{\partial z}{\partial y}$, and evaluate each at the point on S where $x = 2$ and $y = 1$. **[3]**

2. The surface S is defined for all real x and y by the equation

$$z = x^2y - y^3$$

The intersection of S with a plane gives a section of the surface.

(a) Sketch the section of S by the plane $x = 2$, using y and z axes, and label the points where the section meets the axes. **[3]**

(b) On separate axes, sketch the section of S by the plane $z = 0$, using x and y axes, and label each part of the section with its equation. **[2]**

(c) Find $\frac{\partial z}{\partial x}$ and $\frac{\partial z}{\partial y}$, and hence find the gradient of the section in part (a) at the point where it meets the positive y-axis. **[3]**

3. A surface has equation $z = f(x, y)$, where

$$f(x, y) = e^{2x} \cos 2y + 2xy$$

Subscripts denote partial derivatives: for example, f_x denotes $\frac{\partial f}{\partial x}$ and f_{xy} denotes $\frac{\partial^2 f}{\partial y \, \partial x}$.

(a) Find f_x and f_y. **[2]**

(b) Find f_{xx}, f_{yy}, f_{xy} and f_{yx}, and hence show that $f_{xx} + f_{yy} = 0$ for all x and y. **[4]**

(c) Find an equation of the section of the surface in the plane $x = 0$, and describe this section as a single transformation of the curve $z = \cos y$. **[2]**

4. A surface S is defined by $z = f(x, y)$, where

$$f(x, y) = 2xy - 6x + 8y$$

(a) Find $\frac{\partial z}{\partial x}$ and $\frac{\partial z}{\partial y}$. **[2]**

(b) The section of S in the plane $x = a$, where a is a constant, is the line $z = b - 4y$.
Find the value of a and the value of b. **[3]**

(c) Find the equation of the contour of S that passes through the point $(1, 1)$, giving y in terms of x. **[2]**

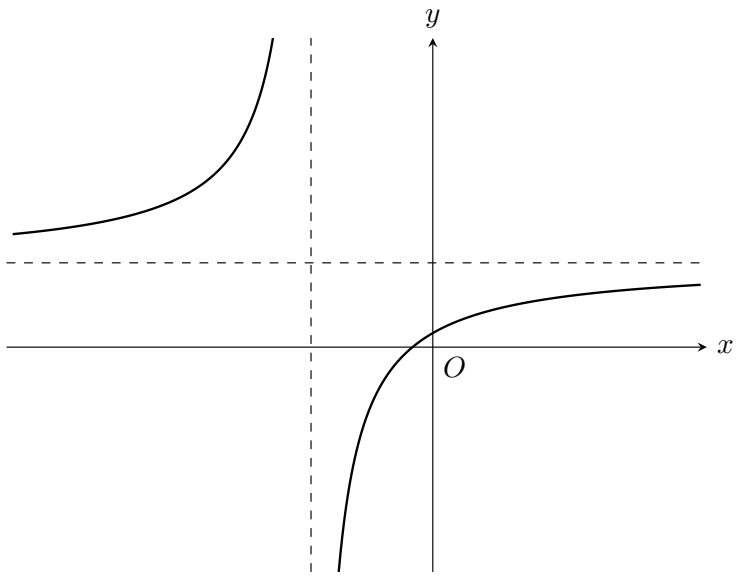

The diagram above shows this contour, together with its asymptotes.

(d) Find the equations of the asymptotes. **[2]**

5. A surface S has equation $g(x, y, z) = 0$, where

$$g(x, y, z) = (2x + y)(x - z)^3 - 16$$

(a) Show that

$$\frac{\partial g}{\partial x} = (x - z)^2(8x + 3y - 2z) \quad \textbf{[2]}$$

(b) Find the value of the constant k such that, for all values of x, y and z,

$$\frac{\partial g}{\partial x} + k\frac{\partial g}{\partial y} + \frac{\partial g}{\partial z} = 0 \quad \textbf{[4]}$$

6. A surface S is defined by

$$z = x^2 + 2xy + 3y^2 - 6x + 10$$

(a) Find $\frac{\partial z}{\partial x}$ and $\frac{\partial z}{\partial y}$. **[2]**

(b) In the section of S given by $y = c$, where c is a constant, the minimum value of z occurs at the point where $x = a$ and $z = 21$.
Find all possible pairs of values of a and c. **[5]**

(c) Sketch the section of S given by $x = 3$ in the y-z plane, stating the coordinates of its minimum point and of the points where it meets the coordinate axes. **[3]**

7. A surface has equation

$$z = x^3 + 3xy^2 - 3x^2 - 3y^2$$

(a) For a point on the surface at which $\frac{\partial z}{\partial x} = \frac{\partial z}{\partial y}$, show that either $y = x$ or $y = x - 2$. **[5]**

(b) Show that the section of the surface by the plane $x = 1$ is a straight line, and describe its position. **[2]**

(c) Sketch, in the x-z plane, the section of the surface by the plane $y = 0$, giving the coordinates of the points where it meets the x-axis and of its turning points. **[3]**

8. A surface S has equation

$$z = 2x^3 - 3x^2y + 4y^2$$

(a) Find the equation of the section of S where $x = 2$, giving it in the form $z = g(y)$. Sketch this section, stating the coordinates of its minimum point and of the point where it meets the plane $y = 0$.
Find, in three-dimensional vector form, an equation of the line of symmetry of this section. **[5]**

(b) Find $\frac{\partial z}{\partial x}$ and $\frac{\partial z}{\partial y}$. **[2]**

(c) For a constant k, the section of S where $x = k$ is a parabola.
Using your answer to part (b), find, in terms of k, the coordinates of the minimum point of this section. **[3]**

9. A surface S is defined by $z = f(x, y)$, where

$$f(x, y) = y^2 e^{-y(x^2-6x+10)}$$

(a) Find $\frac{\partial f}{\partial x}$ and $\frac{\partial f}{\partial y}$. **[4]**

(b) Specify a sequence of transformations which maps the graph of $z = e^{-x^2}$ onto the section of S in the plane $y = 2$. **[3]**

(c) Hence, or otherwise, sketch the section of S in the plane $y = 2$, stating the exact coordinates of its highest point. **[2]**

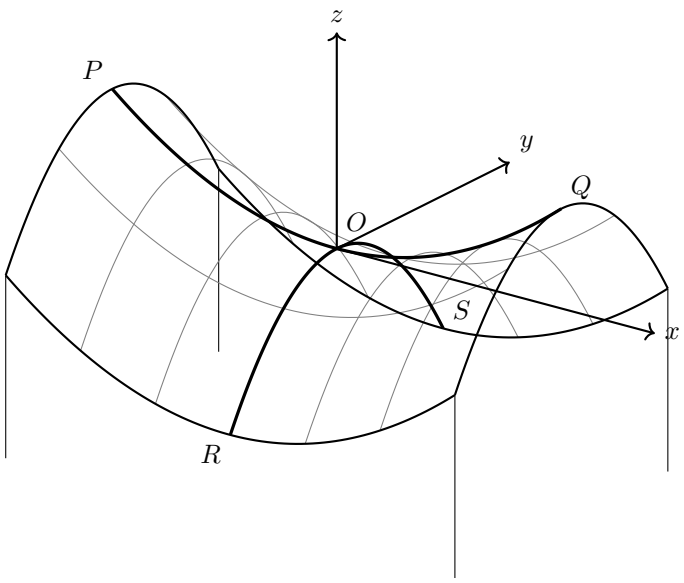

10. An architect is designing the roof of a pavilion. The roof is modelled by a surface with equation $z = f(x, y)$ which has a saddle point at the origin O.
The z-axis is vertically upwards, and the x- and y-axes lie in a horizontal plane, with the x-axis along the length of the pavilion and the y-axis across it, as shown in the diagram above.
The arc POQ is part of a parabola which lies in the x-z plane, rising from O to the points P and Q. The arc ROS is part of a parabola which lies in the y-z plane, falling from O to the points R and S, where S has a positive y-coordinate. The roof is symmetric in both the x-z plane and the y-z plane.
The distance PQ is to be 12 m, with both P and Q at a height of 1.2 m above O. The distance RS is to be 8 m, and the gradient of the arc ROS at S is to be -0.8.

(a) On separate diagrams, sketch the sections $x = 0$ and $y = 0$. **[2]**

(b) Determine a function f that describes the roof. You do not need to state the domain of f. **[5]**

(c) Find the equations of the contour of the surface at the height of O, and find the acute angle between the two lines that form this contour. **[3]**

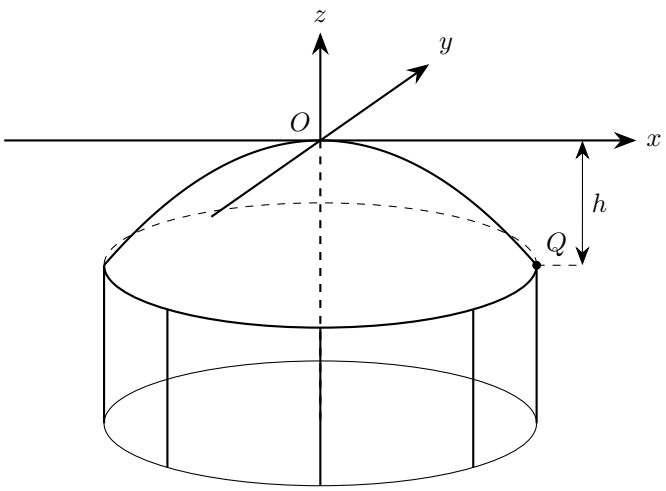

11. The diagram above shows a bandstand with a curved roof. The roof is modelled by the surface generated by rotating part of a parabola about the vertical z-axis.
The model is part of the surface with equation $z = f(x, y)$, and the highest point of the roof is the origin O, which lies on the surface.
The lower edge of the roof is a horizontal circle. The point Q is on this edge, directly below the positive x-axis, at a depth h below O.

(a) The vertical plane containing both Q and the z-axis meets the surface of the model in a section.

(i) Sketch this section, marking the positions of O and Q. **[1]**

(ii) State a suitable equation for this section, in terms of x, z and a constant. **[1]**

(b) The horizontal plane containing Q meets the surface of the model in a contour, and the horizontal plane $z = -\frac{4h}{9}$ meets it in a second contour.

(i) Sketch these two contours on a single set of axes in the x-y plane. **[1]**

(ii) Using your answer to part **(a)(ii)**, state an equation for each contour, and hence show that the radius of the second contour is $\frac{2}{3}$ of the radius of the first. **[2]**

(c) A proposed equation for the surface is $z = ax^2 + by^2 + cxy$. What can you say about the constants a, b and c? Justify your answers. **[4]**

(d) In the real bandstand, the lower edge of the roof is a circle of diameter 8 m. A lamp hangs from a point L on the roof at a horizontal distance of 2 m from the z-axis and 0.5 m below O. Using the equation in part **(c)**, with distances in metres, find the values of a, b, c and h. **[3]**

(e) Using your answers to part **(d)**, find the value of $\frac{\partial z}{\partial x}$ at Q. Hence find the angle that the roof makes with the horizontal at Q, measured in the vertical plane containing Q and the z-axis. **[3]**

12. A surface, S, is given by the equation $z = f(x, y)$ for all real values of x and y, where f is continuous and $f(-x, y) = f(x, y) = f(x, -y)$ for all x and y.

You are given that S has the following properties.

- For $a > 3$, the contour $z = a$ is empty.
- The contour $z = 3$ consists of the two points $(2, 0, 3)$ and $(-2, 0, 3)$.
- For $0 < a < 3$, the contour $z = a$ consists of two separate closed curves: one lies in the region $x > 0$ and encloses the point $(2, 0, a)$, and the other is its reflection in the plane $x = 0$.
- The contour $z = 0$ consists of two closed curves which meet only at the origin: one lies in the region $x \geq 0$ and encloses the point $(2, 0, 0)$, and the other is its reflection in the plane $x = 0$.
- For $a < 0$, the contour $z = a$ is a single closed curve which encloses both of the points $(2, 0, a)$ and $(-2, 0, a)$.

(a) Sketch a possible section of S corresponding to $y = 0$, labelling the points where the section reaches $z = 3$ and the point where it meets the z-axis. **[4]**

(b) Sketch a possible section of S corresponding to $x = 0$, explaining how the contours show where its highest point lies. **[3]**

13. For $x, y \in \mathbb{R}$ with $x \neq 0$, the function f is given by

$$f(x, y) = \left(x^3 + y^3\right) e^{y/x}$$

Subscripts denote partial derivatives: for example, f_x denotes $\frac{\partial f}{\partial x}$ and f_{xy} denotes $\frac{\partial^2 f}{\partial y \, \partial x}$.

(a) Show that $xf_x + yf_y = nf$, where n is a positive integer to be determined. **[5]**

(b) By differentiating the result of part (a) with respect to x and with respect to y, or otherwise, show that

$$x^2 f_{xx} + 2xyf_{xy} + y^2 f_{yy} = kf$$

where k is a constant to be found. **[5]**

14. The surface S has equation

$$z^3 + 3xz = y^2 + 2$$

(a) Show that

$$2y\frac{\partial z}{\partial x} + 3z\frac{\partial z}{\partial y} = 0$$ **[4]**

(b) Show that

$$\frac{\partial^2 z}{\partial x\,\partial y} = \frac{2y\left(z^2 - x\right)}{3\left(z^2 + x\right)^3}$$ **[3]**

(c) Find an equation for the contour of S on which $z = 2$. Sketch this contour in the x-y plane, stating the coordinates of the points where it meets the coordinate axes. **[3]**

15. The surface S has equation

$$x^2e^z + 2x - 4y^2 = 8(z+1)$$

The point $P(4, 2, 0)$ lies on S.

(a) Find the values of $\frac{\partial z}{\partial x}$ and $\frac{\partial z}{\partial y}$ at P. **[4]**

(b) Find the value of $\frac{\partial^2 z}{\partial x^2}$ at P. **[4]**

(c) Show that the contour of S on which $z = 0$ has equation $(x+1)^2 - 4y^2 = 9$. Sketch this contour in the x-y plane, stating the coordinates of the points where it meets the x-axis. **[3]**