ESAT-style practice paper

Set C Physics

TIME ALLOWED
40
MINUTES

27 multiple-choice questions

An average of 89 seconds per question.

Instructions

- Attempt all 27 questions.
- Calculators are *not* permitted.
- No formula booklet is provided.
- Use scrap paper or a whiteboard for rough working.

Information

- Each question has one correct answer and is worth one mark.
- No marks are deducted for incorrect answers.
- The questions are not arranged in order of difficulty.
- The ESAT itself is taken on a computer, with erasable sheets for rough working.

Questions

Question 1 *Waves & Optics* 2
Question 2 *Mechanics* 3
Question 3 *Atomic Physics & Radioactivity* 4
Question 4 *Electricity* 5
Question 5 *Magnetism* 6
Question 6 *Mechanics* 7
Question 7 *Waves & Optics* 8
Question 8 *Mechanics* 9
Question 9 *Atomic Physics & Radioactivity* 10
Question 10 *Magnetism* 11
Question 11 *Waves & Optics* 12
Question 12 *Thermal Physics* 13
Question 13 *Mechanics* 14
Question 14 *Electricity* 15
Question 15 *Atomic Physics & Radioactivity* 16
Question 16 *Mechanics* 17
Question 17 *Mechanics* 18
Question 18 *Thermal Physics* 19
Question 19 *Mechanics* 20
Question 20 *Thermal Physics* 21
Question 21 *Electricity* 22
Question 22 *Mechanics* 23
Question 23 *Waves & Optics* 24
Question 24 *Electricity* 25
Question 25 *Atomic Physics & Radioactivity* 26
Question 26 *Mechanics* 27
Question 27 *Waves & Optics* 28

Waves & Optics

1. A sound wave of frequency 500 Hz travels through air.
Each particle of air oscillates about a fixed position with amplitude 2.0 μm.
What is the total distance travelled by one particle in 8.0 ms?

A 0 μm

B 8.0 μm

C 16 μm

D 32 μm

E 64 μm

Mechanics

2. A crane motor has an electrical input power of 10 kW and an efficiency of 60%.
The motor raises a load of mass 900 kg through a vertical height of 60 m at a steady speed.
Take $g = 10\,\mathrm{N\,kg^{-1}}$.
How long does the motor take to raise the load?

A 0.54 min

B 0.90 min

C 1.50 min

D 2.25 min

E 2.50 min

Atomic Physics & Radioactivity

3. A sample contains two radioactive nuclides, X and Y. Each decays directly to a different stable nuclide.

The half-life of X is 2 days and the half-life of Y is 6 days.

At the start, the sample contains 4 times as many atoms of X as atoms of Y.

After how long does the sample contain equal numbers of undecayed atoms of X and undecayed atoms of Y?

A 2 days

B 3 days

C 4 days

D 6 days

E 8 days

F 12 days

G 16 days

Electricity

4. Two identical resistors, each of resistance $6.0\,\Omega$, are connected in series across a $12\,\text{V}$ battery of negligible internal resistance. The total power dissipated in the circuit is P_{series}.

The same two resistors are then disconnected and reconnected in parallel across the same battery. The total power dissipated in the circuit is now P_{parallel}.

What is the value of $\dfrac{P_{\text{parallel}}}{P_{\text{series}}}$?

A $\dfrac{1}{4}$

B $\dfrac{1}{2}$

C 1

D 2

E 4

F 8

Magnetism

5. A U-shaped permanent magnet rests on a top-pan balance. A straight horizontal wire is held in a fixed clamp so that it passes through the gap between the poles of the magnet. The wire does not touch the magnet or the balance.

The magnetic field between the poles is uniform and horizontal, and it is at right angles to the wire. The length of wire inside this field is 5.0 cm. The field is negligible everywhere else.

The wire is connected in series with a 3.0 Ω resistor and a variable dc supply. The resistance of the wire is negligible. The supply is adjusted until the power dissipated in the resistor is 48 W.

With the current in one direction, the balance reads 102.4 g. With the same size of current in the opposite direction, the balance reads 97.6 g.

The balance reading in grams is the downward force on its pan divided by g. Take $g = 10\,\mathrm{N\,kg^{-1}}$.

What is the magnetic flux density between the poles of the magnet?

A 0.012 T

B 0.030 T

C 0.040 T

D 0.060 T

E 0.12 T

F 0.24 T

Mechanics

6. A car moves along a straight horizontal road in one direction only. It starts from rest.

The graph shows how the square of the car's speed, v^2, varies with the distance s the car has travelled. The graph consists of three straight-line sections.

What is the total time taken for the car to travel the 130 m shown on the graph?

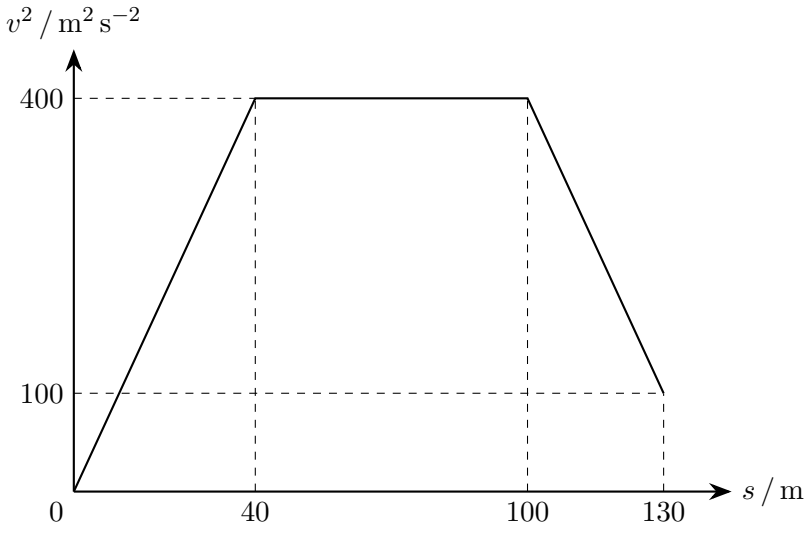

A 6.0 s

B 6.5 s

C 8.0 s

D 9.0 s

E 10 s

F 13 s

Waves & Optics

7. An earthquake occurs at a distance d from a monitoring station.

P-waves and S-waves leave the earthquake at the same time and travel along the same path to the station.

The P-waves travel at a constant speed of $6.0\,\text{km}\,\text{s}^{-1}$ and the S-waves at a constant speed of $3.5\,\text{km}\,\text{s}^{-1}$.

The first S-wave arrives 50 s after the first P-wave.

What is the value of d?

A 125 km

B 175 km

C 300 km

D 420 km

E 475 km

Mechanics

8. A lift and its passengers have a total mass of 1200 kg.

The lift starts from rest and moves vertically upwards with constant acceleration.

After travelling 8.0 m, its speed is $4.0\,\mathrm{m\,s^{-1}}$.

The cable is vertical and has negligible mass, and friction and air resistance are negligible.

Take $g = 10\,\mathrm{N\,kg^{-1}}$.

What is the tension in the cable during this motion?

A 1.2 kN

B 10.8 kN

C 12.0 kN

D 12.6 kN

E 13.2 kN

F 14.4 kN

Atomic Physics & Radioactivity

9. A sealed, rigid vessel initially contains only tritium gas, whose molecules each contain two tritium atoms.

Tritium undergoes beta decay to form stable helium-3.

In the model used, helium remains as separate atoms and all undecayed tritium atoms are paired into molecules.

Only these atoms and molecules contribute to the gas pressure, which is proportional to their total number at fixed temperature and volume.

The gas is kept at constant temperature and none of the tritium or helium escapes.

After 24.6 years, the pressure is $\frac{7}{4}$ of its initial value.

What is the half-life of tritium?

A 6.15 years

B 8.20 years

C 12.3 years

D 24.6 years

E 49.2 years

Magnetism

10. An ac generator has a coil of N turns. At a particular rotation rate, its output has a peak voltage of 12 V and a period of 20 ms.

The peak voltage is directly proportional to the number of turns and to the rotation rate. The period is inversely proportional to the rotation rate.

The coil is replaced by one with $2N$ turns, and the rotation rate is halved. The generator is then connected to the 150-turn primary coil of an ideal transformer. A voltmeter is connected across the 600-turn secondary coil.

What are the peak voltage across the voltmeter and the period of this voltage?

	peak voltage	**period**
A	12 V	40 ms
B	24 V	40 ms
C	48 V	10 ms
D	48 V	20 ms
E	48 V	40 ms
F	96 V	40 ms

Waves & Optics

11. A narrow laser beam travels horizontally and strikes a small plane mirror at point O.

The mirror is initially at 45° to the horizontal, so the reflected beam travels vertically upwards and makes a spot at point P on a large, flat, horizontal ceiling.

The ceiling is 2.0 m above O.

The laser is kept fixed, and the mirror is rotated through 30° about a horizontal axis through O that is perpendicular to the laser beam.

The reflected beam still strikes the ceiling.

How far does the spot on the ceiling move from P?

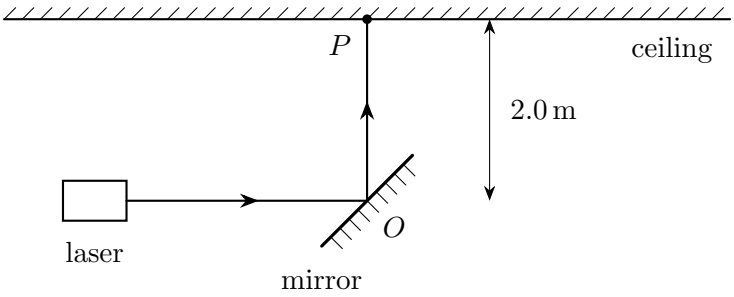

A 1.0 m

B $\frac{2\sqrt{3}}{3}$ m

C $\sqrt{3}$ m

D $\frac{4\sqrt{3}}{3}$ m

E $2\sqrt{3}$ m

F 4.0 m

Thermal Physics

12. A thermally insulated container of negligible heat capacity holds a mass m of ice at $0\,^{\circ}\mathrm{C}$.

A mass m_{w} of water at $100\,^{\circ}\mathrm{C}$ is added.

The final contents are entirely water at $0\,^{\circ}\mathrm{C}$, with no ice remaining.

The experiment is repeated with the same mass m of ice at $0\,^{\circ}\mathrm{C}$, but a mass m_{s} of steam at $100\,^{\circ}\mathrm{C}$ is added instead.

All of the steam condenses.

The final contents are again entirely water at $0\,^{\circ}\mathrm{C}$, with no ice remaining.

The specific heat capacity of water is $4200\,\mathrm{J\,kg^{-1}\,^{\circ}C^{-1}}$, and the specific latent heat of vaporisation of water is $2.1 \times 10^{6}\,\mathrm{J\,kg^{-1}}$.

What is the value of $\dfrac{m_{\mathrm{w}}}{m_{\mathrm{s}}}$?

A $\dfrac{1}{6}$

B 1

C 4

D 5

E 6

F 7

Mechanics

13. The distance–time graph below shows a car travelling in a straight line.

The car starts from rest, speeds up for 10 s and then moves at a steady speed.

The mass of the car is 1000 kg.

What is the steady speed of the car, and what is the mean resultant force on the car while it is speeding up?

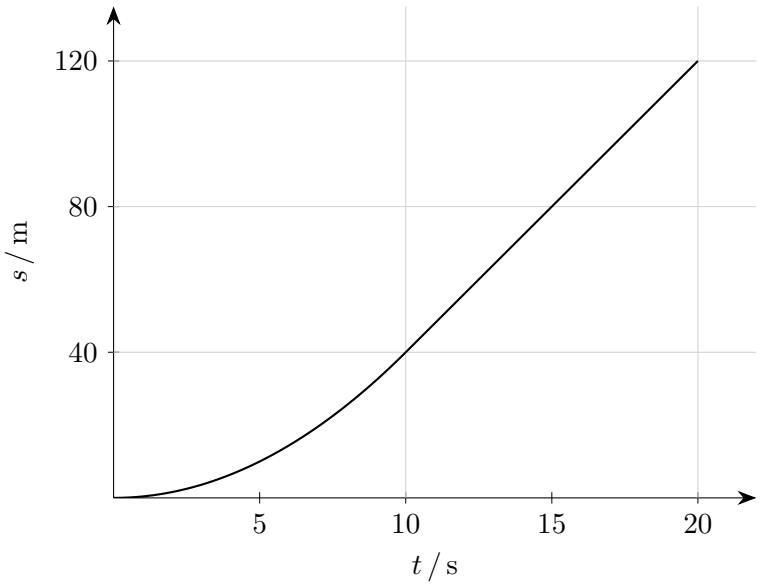

	steady speed	mean resultant force
A	$4\,\mathrm{m\,s^{-1}}$	400 N
B	$6\,\mathrm{m\,s^{-1}}$	600 N
C	$8\,\mathrm{m\,s^{-1}}$	400 N
D	$8\,\mathrm{m\,s^{-1}}$	800 N
E	$8\,\mathrm{m\,s^{-1}}$	8000 N

Electricity

14. A battery of constant voltage 12 V and negligible internal resistance is connected in series with a lamp and a variable resistor, as shown in the diagram below.

The lamp has a constant resistance of 4.0 Ω.

The resistance of the variable resistor can be set to any value from 2.0 Ω to 20 Ω.

An ideal voltmeter is connected across the lamp.

What is the range of possible readings on the voltmeter?

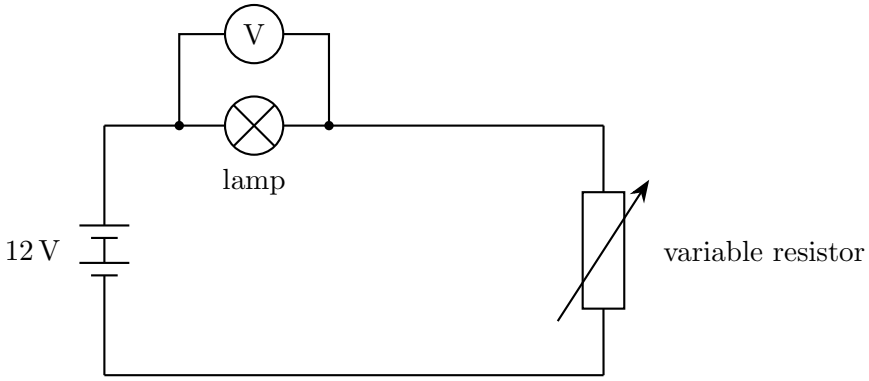

A 0 V to 8.0 V

B 2.0 V to 8.0 V

C 2.0 V to 12 V

D 2.4 V to 8.0 V

E 4.0 V to 10 V

Atomic Physics & Radioactivity

15. A radioactive source contains the nuclide $^{14}_{6}\mathrm{C}$.

The source emits only one type of radiation.

The radiation passes through a sheet of paper but is stopped by a 2 mm thick sheet of aluminium.

In an electric field, the radiation is deflected towards the positive plate.

Which row gives the radiation emitted and the daughter nuclide formed by each decay?

	radiation	**daughter nuclide**
A	α	$^{10}_{4}\mathrm{Be}$
B	α	$^{18}_{8}\mathrm{O}$
C	β^-	$^{14}_{5}\mathrm{B}$
D	β^-	$^{14}_{7}\mathrm{N}$
E	β^-	$^{13}_{7}\mathrm{N}$
F	γ	$^{14}_{6}\mathrm{C}$

Mechanics

16. A student carries out four calculations. Each calculation uses quantities given with their units.

I $(20\,\mathrm{N}) \times (3.0\,\mathrm{m}) \div (4.0\,\mathrm{s})$

II $(5.0\,\mathrm{kg}) \times (10\,\mathrm{N\,kg^{-1}}) \times (2.0\,\mathrm{m\,s^{-1}})$

III $(6.0\,\mathrm{kg}) \times (4.0\,\mathrm{m\,s^{-1}})^2 \div (2.0\,\mathrm{m})$

IV $(3.0\,\mathrm{kg\,m\,s^{-1}}) \times (2.0\,\mathrm{m\,s^{-2}})$

Which of these calculations give a power in its SI unit, the watt?

A I only

B I and II only

C I and III only

D II and IV only

E I, II and IV only

F I, III and IV only

G II, III and IV only

H I, II, III and IV

Mechanics

17. Trolley A of mass 3.0 kg travels at a constant velocity of $4.0\,\mathrm{m\,s^{-1}}$ to the right along a straight, horizontal, frictionless track.

Trolley B of mass 1.0 kg is initially at rest on the track. A light horizontal spring that obeys Hooke's law is attached to the left-hand end of trolley B.

Trolley A collides with the spring, compressing it along the line of motion.

What is the maximum elastic potential energy stored in the spring during the collision?

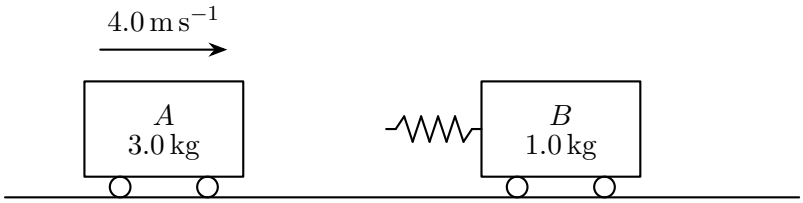

A 4.5 J

B 6.0 J

C 10.5 J

D 12.0 J

E 18.0 J

F 24.0 J

Thermal Physics

18. A small bubble of air is released from the bottom of a lake at a depth of 30 m below the surface. The bubble rises, and the air inside it stays at the same temperature throughout.

The pressure of the air inside the bubble is equal to the pressure of the surrounding water.

Atmospheric pressure at the water surface is 100 kPa, the density of the water is $1000\,\mathrm{kg\,m^{-3}}$, and $g = 10\,\mathrm{N\,kg^{-1}}$.

At what depth below the surface is the volume of the bubble twice its volume at the moment of release?

A 5 m

B 10 m

C 15 m

D 20 m

E 25 m

F The volume never becomes twice its value at release.

Mechanics

19. A ball of mass 0.20 kg strikes a horizontal floor with a vertically downward velocity of $6.0\,\mathrm{m\,s^{-1}}$.
The ball rebounds with a vertically upward velocity of $4.0\,\mathrm{m\,s^{-1}}$.
The ball is in contact with the floor for 0.050 s.
Neglect air resistance and take $g = 10\,\mathrm{N\,kg^{-1}}$.
What is the magnitude of the average force exerted by the floor on the ball during contact?

A 8.0 N

B 10 N

C 38 N

D 40 N

E 42 N

Thermal Physics

20. Heat is conducted through a flat wall of a cool box.

The rate of conduction is proportional to the wall's area and the temperature difference between its faces, and inversely proportional to its thickness.

The table gives factors by which the original area, temperature difference and thickness are multiplied, with the wall material unchanged.

Which row gives the same rate of conduction as at first?

	Area factor	**Temperature difference factor**	**Thickness factor**
A	$\frac{1}{2}$	2	3
B	2	3	$\frac{1}{2}$
C	2	3	3
D	3	2	6
E	2	$\frac{1}{4}$	2

Electricity

21. A battery of negligible internal resistance is connected to two identical lamps, L_1 and L_2, in series, as shown in the circuit diagram.

Each lamp has a constant resistance R.

A third identical lamp, L_3, is connected in the circuit by closing the switch S, so that L_3 is in parallel with L_2.

When S is closed, the current through L_1 is multiplied by a factor f_1 and the current through L_2 is multiplied by a factor f_2.

What are the values of f_1 and f_2?

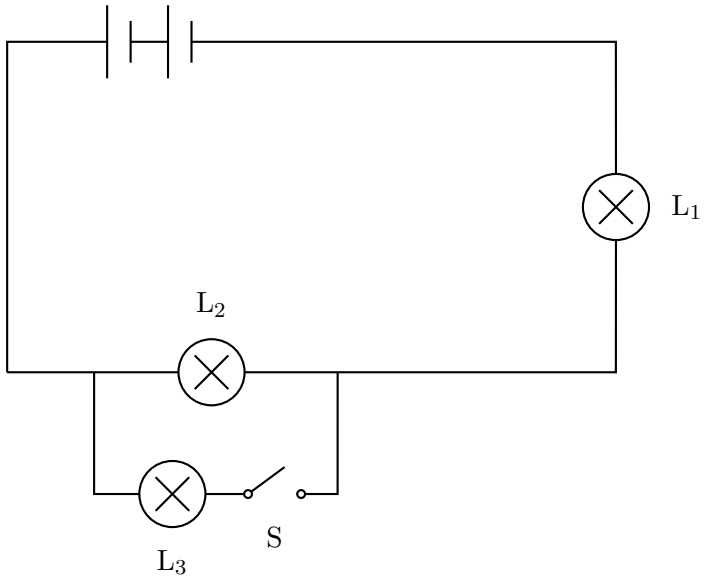

A $f_1 = \frac{4}{3},\ f_2 = \frac{2}{3}$

B $f_1 = \frac{3}{2},\ f_2 = \frac{3}{4}$

C $f_1 = \frac{4}{3},\ f_2 = \frac{4}{3}$

D $f_1 = \frac{2}{3},\ f_2 = \frac{4}{3}$

E $f_1 = \frac{3}{2},\ f_2 = \frac{3}{2}$

F $f_1 = 1,\ f_2 = \frac{1}{2}$

Mechanics

22. A solid cube of side 0.10 m is held completely submerged in a tank of water, with its top and bottom faces horizontal.

The top face of the cube is at a depth of 0.40 m below the surface of the water.

The water has density $1000\,\text{kg}\,\text{m}^{-3}$. Take $g = 10\,\text{N}\,\text{kg}^{-1}$.

What is the magnitude of the resultant force on the cube due to the water pressure acting on its faces?

A 0 N

B 10 N

C 20 N

D 40 N

E 50 N

F 100 N

Waves & Optics

23. Water waves of wavelength 30 mm approach a straight boundary between deep and shallow water, as shown in the diagram below.

Their speed in the deep water is $0.24\,\mathrm{m\,s^{-1}}$.

Their speed in the shallow water is $0.16\,\mathrm{m\,s^{-1}}$.

Which row gives the wavelength in the shallow water and the change in direction as the waves cross the boundary?

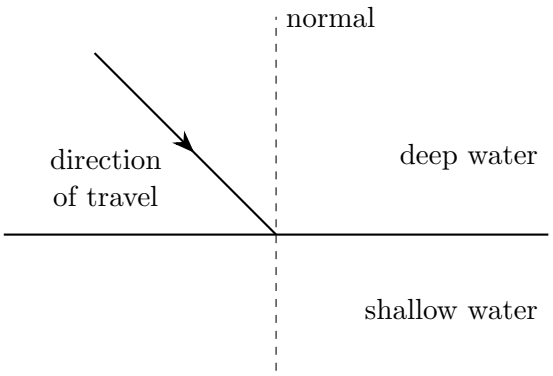

	Wavelength	**Change in direction**
A	20 mm	towards the normal
B	20 mm	away from the normal
C	30 mm	towards the normal
D	30 mm	away from the normal
E	45 mm	towards the normal
F	45 mm	away from the normal

Electricity

24. A sealed box has two terminals, X and Y. The box contains only resistors and one ideal diode. An ideal diode has zero resistance when it conducts, and conducts current in one direction only.

The terminals are connected to a 6.0 V dc supply of negligible internal resistance.

When X is connected to the positive terminal of the supply, the power supplied to the box is 18 W.

When the connections are reversed, so that Y is connected to the positive terminal, the power supplied to the box is 6.0 W.

In the options, a diode labelled "$X \to Y$" conducts only when current passes through the box from X to Y. A diode labelled "$Y \to X$" conducts only when current passes through the box from Y to X.

Which of the following could be the contents of the box?

A A diode $X \to Y$ in series with a 6 Ω resistor, all in parallel with a 3 Ω resistor

B A diode $Y \to X$ in series with a 3 Ω resistor, all in parallel with a 6 Ω resistor

C A diode $X \to Y$ in series with a 3 Ω resistor, all in parallel with a 6 Ω resistor

D A diode $X \to Y$ in parallel with a 3 Ω resistor, all in series with a 3 Ω resistor

E A diode $Y \to X$ in parallel with a 4 Ω resistor, all in series with a 2 Ω resistor

F A diode $X \to Y$ in parallel with a 3 Ω resistor, all in series with a 6 Ω resistor

Atomic Physics & Radioactivity

25. A narrow beam containing alpha particles, beta (β^-) particles and gamma radiation passes between two oppositely charged parallel plates, as shown in the diagram below.

The space between the plates is a vacuum.

The three paths are labelled P, Q and R.

Which row identifies the radiation following each path?

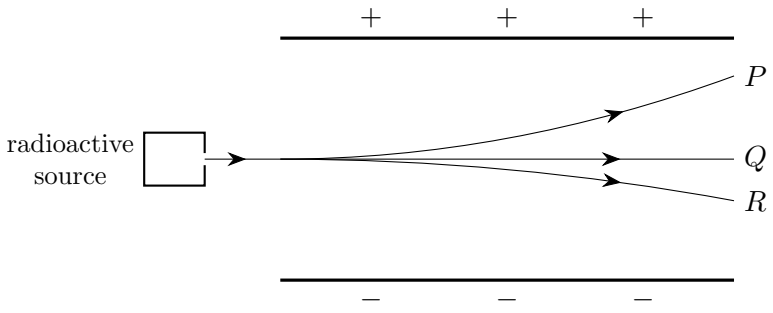

	P	Q	R
A	alpha	beta	gamma
B	alpha	gamma	beta
C	beta	alpha	gamma
D	beta	gamma	alpha
E	gamma	alpha	beta
F	gamma	beta	alpha

Mechanics

26. A car of mass 1200 kg slows from $20\,\mathrm{m\,s^{-1}}$ to $10\,\mathrm{m\,s^{-1}}$ along a straight, level road.
The car travels 60 m while slowing.
The engine provides no driving force, and the total resistive force is constant.
What is the magnitude of the total resistive force?

A 1000 N

B 2000 N

C 3000 N

D 4000 N

E 6000 N

Waves & Optics

27. A train travels at a steady speed past a stationary listener with its whistle sounding continuously.

The whistle emits sound at a constant frequency.

Which row correctly compares the frequency, wavelength and speed in air of the sound heard behind the train with the values for the sound emitted when the train is stationary?

	frequency	**wavelength**	**speed in air**
A	lower	longer	lower
B	lower	longer	unchanged
C	lower	shorter	unchanged
D	higher	shorter	unchanged
E	higher	longer	unchanged
F	unchanged	unchanged	higher